2Trig 6Cyl 1Coil 12V Mag

Harness Required: E15 Ver 1.0 & E13 Ver 1.0

Last Changed: 15/07/2008

Drawing Ver: 1.0

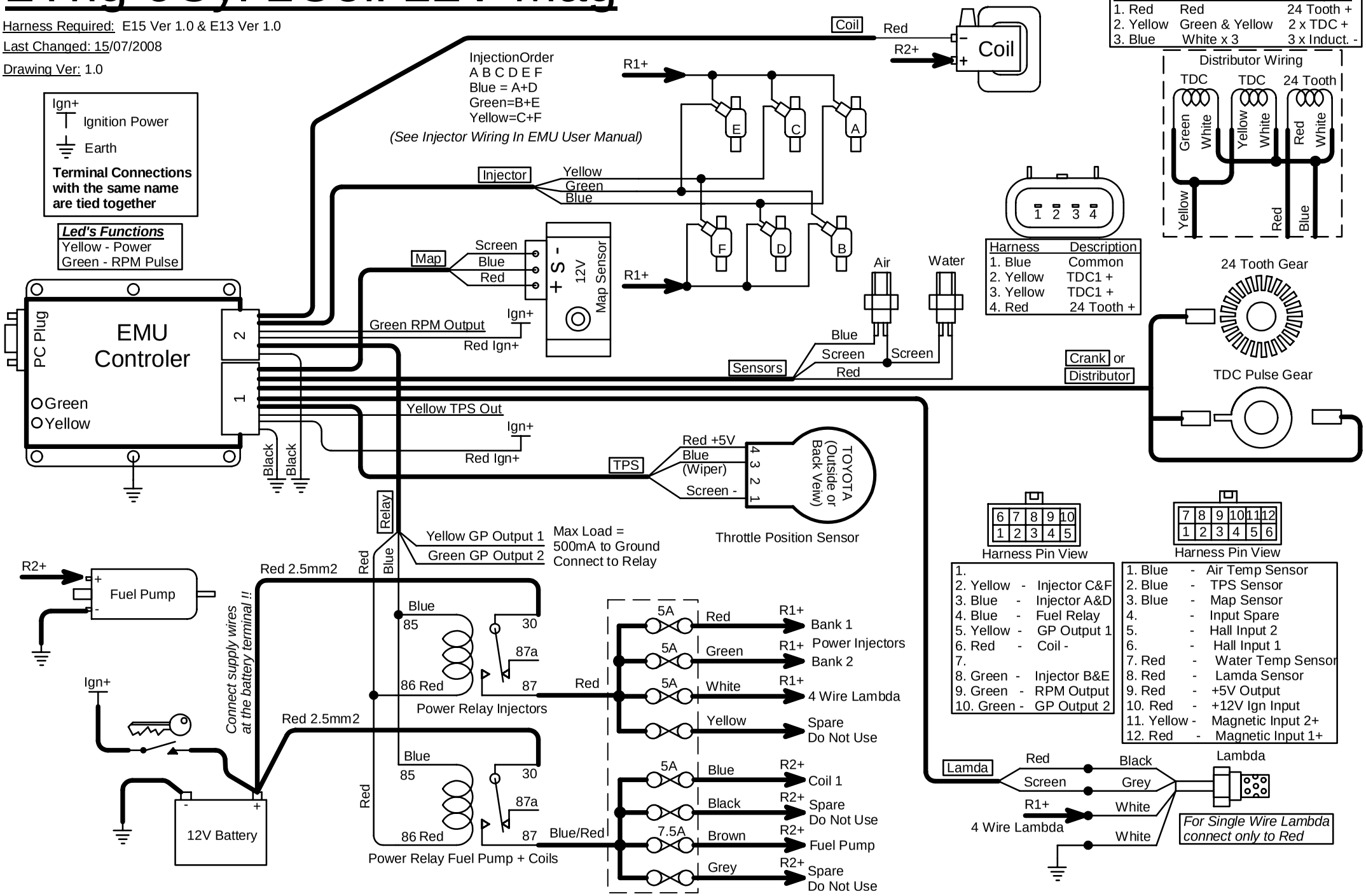

Harness	Distributor	Description
1. Red	Red	24 Tooth +
2. Yellow	Green & Yellow	2 x TDC +
3. Blue	White x 3	3 x Induct. -

Distributor Wiring

Harness	Description
1. Blue	Common
2. Yellow	TDC1 +
3. Yellow	TDC1 +
4. Red	24 Tooth +

1.		
2. Yellow	-	Injector C&F
3. Blue	-	Injector A&D
4. Blue	-	Fuel Relay
5. Yellow	-	GP Output 1
6. Red	-	Coil -
7.		
8. Green	-	Injector B&E
9. Green	-	RPM Output
10. Green	-	GP Output 2

1. Blue	-	Air Temp Sensor
2. Blue	-	TPS Sensor
3. Blue	-	Map Sensor
4.	-	Input Spare
5.	-	Hall Input 2
6.	-	Hall Input 1
7. Red	-	Water Temp Sensor
8. Red	-	Lamda Sensor
9. Red	-	+5V Output
10. Red	-	+12V Ign Input
11. Yellow	-	Magnetic Input 2+
12. Red	-	Magnetic Input 1+